SIMPLEX POF CABLE WITH MEGOLON JACKET
Ref. : CAME1001-22A

DESCRIPTION

Optical cable “CAME1001-22A” with tight structure, consists of one polymer optical fiber (POF) Ø 1 mm, reference PG U FB1000, with MEGOLON outer jacket. Color of coating in megolon could be in black or blue or orange or green.

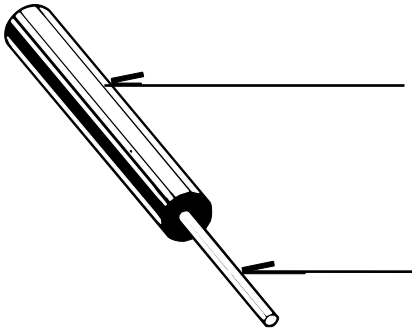

APPLICATIONS

Optical cable recommended for data transmission in strongly disturbed environment.

FEATURES RELATED TO SIMPLEX FOP CABLE WITH MEGOLON JACKET

Outer diameter in mm	2,2 +/-0,1
Attenuation at 660nm in dB/km	< 290
Linear mass in kg/km	4
Fiber eccentricity in mm	0,15
Dynamic bending radius in mm	25
Static bending radius in mm	9
Tensile load in daN	6
Available temperature range in °	-30 à +70

FEATURES RELATED TO POLYMER OTICAL FIBER ref PGU FB100

Core material	PMMA
Ø core in µm	980
Core refraction index	1,492
Cladding material	Fluorinated polymer
Ø cladding in µm	10
Cladding refraction index	1,405
Attenuation dB/km at 660nm	< 180
Numerical aperture	0,5
Acceptance angle °	60

LUXERI Is specialized for more than 20 years in the sale of products with plastic fiber used in data transmission an in lighting. From the study of complex projects to the sale of quality products thanks to TORAY® fiber, **LUXERI** offers a wide range of products and services aimed at professionals and companies.